EE-434 Power Electronics

Engr. Dr. Hadeed Ahmed Sher

Ghulam Ishaq Khan Institute of Engineering Sciences and Technology
Topi 23460, Pakistan

hadeed@giki.edu.pk

February 27, 2020

Overview

1. Isolated DC-DC converters
   - Introduction
2. Transformer model
3. The flyback converter — CCM mode
   - Switch on condition
   - Switch off condition
   - Transfer function derivation
   - Currents and voltage in flyback converter
   - Determining the component values
4. Multiple output flyback converter

Introduction

Non-isolated dc-dc converters have some issues.

- Common ground between input and output.
- Not having multiple outputs.

One way to address this is to use a transformer. However, the use of transformer in a converter is more fruitful if the transformer is made part of the dc-dc converters.
Such transformer is designed for high frequency and therefore, it has much smaller size compared to a line transformer.
To understand the transformer isolated dc-dc converter, transformer models are presented first.

Transformer model

A two winding transformer is shown

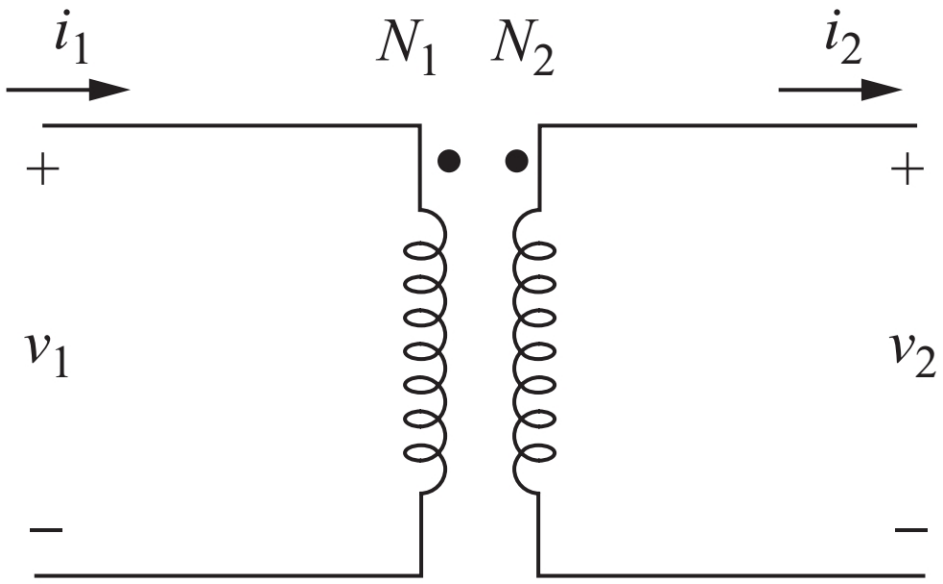

These current voltage expression is

$$\frac{v_1}{v_2} = \frac{i_2}{i_1} = \frac{N_1}{N_2} \tag{1}$$

Dot indicates the polarity of transformer. Current entering into one dotted terminal, current leaves the dotted terminal of other winding.

Transformer model

A more elaborated model of a transformer is shown below.

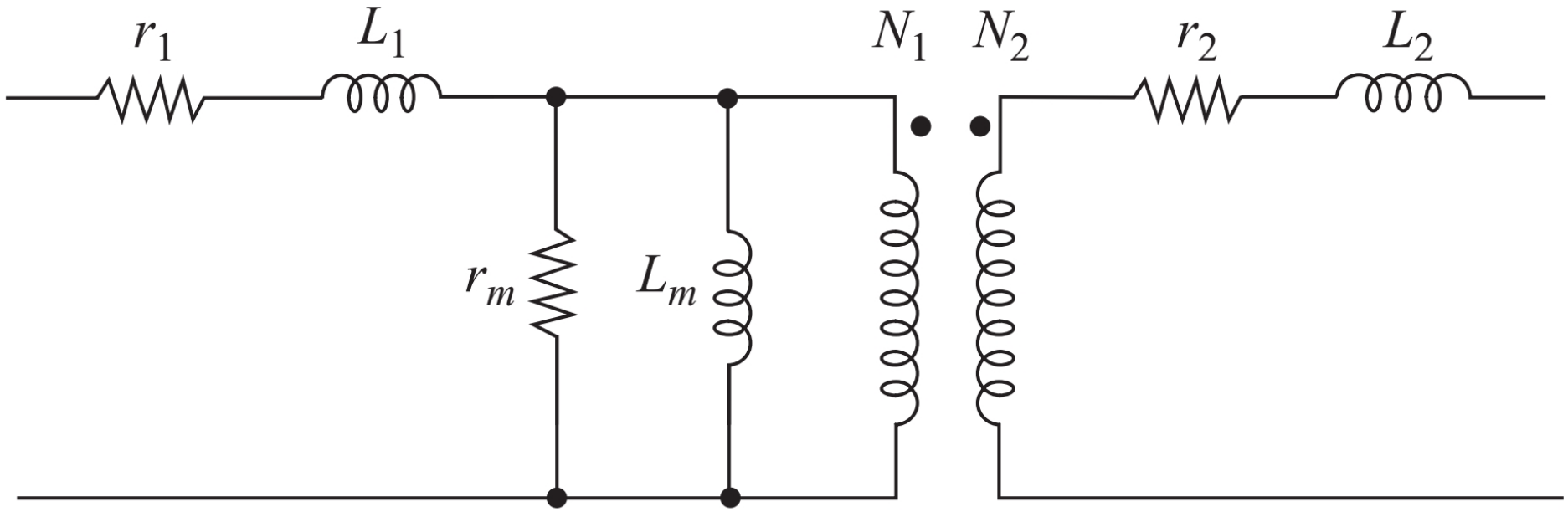

r_1 and r_2 are resistance of the primary and secondary winding respectively. L_1 and L_2 are leakage inductances of primary and secondary inductances. L_m is magnetizing inductance and r_m represents core loss. Ideally, series elements are zero and shunt elements are infinite.

Transformer model

In analysis, usually series elements are ignored. L_m is an important parameters in flyback transformer design.

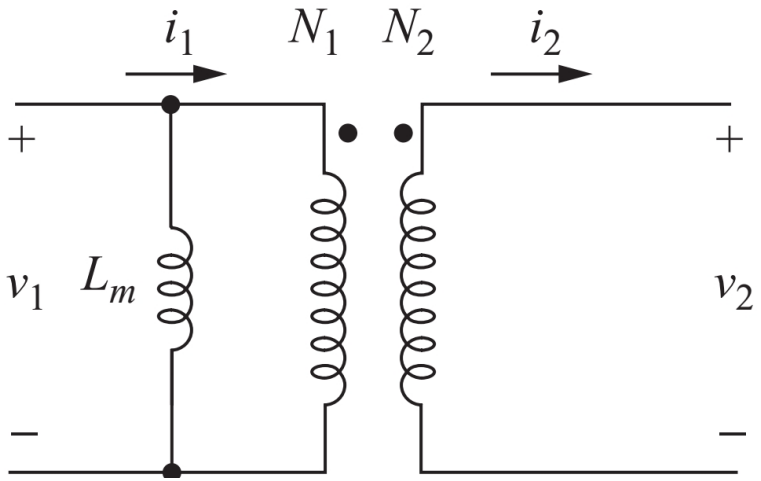

For periodic voltage and current to a transformer the magnetic flux in the core should return to its starting value. If not, the flux will increase that eventually saturates the transformer. A saturated core is a short circuit which means the device currents go beyond the design limits of the circuit. All laws pertaining to inductor apply on L_m.

Transformer model

Flyback transformer is actually a two-winding inductor, having the same symbol as a transformer. The model of a flyback transformer includes a small magnetizing inductance that store energy and transfer it to the load in a controlled fashion.

Flyback converter

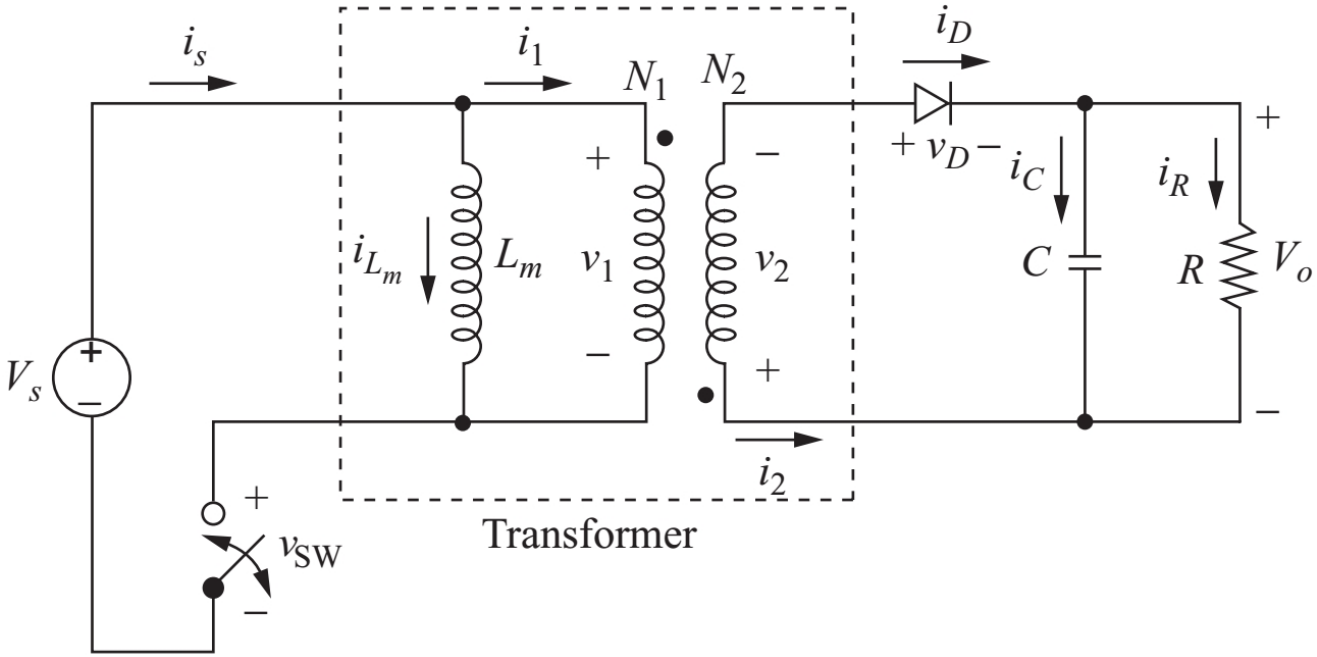

The analysis will follow the approach we have developed during last few lectures.

Switch is connected on low side for ease in gate drive circuit. Based on switch state, two equivalent circuits are developed.

Assumptions for analysis

Following are the assumptions for analysis.

- Output capacitor is very large such that output voltage is constant.
- Circuit is in steady state condition.
- D is the duty cycle during which switch is in ON condition.
- All elements are ideal.

Switch on condition

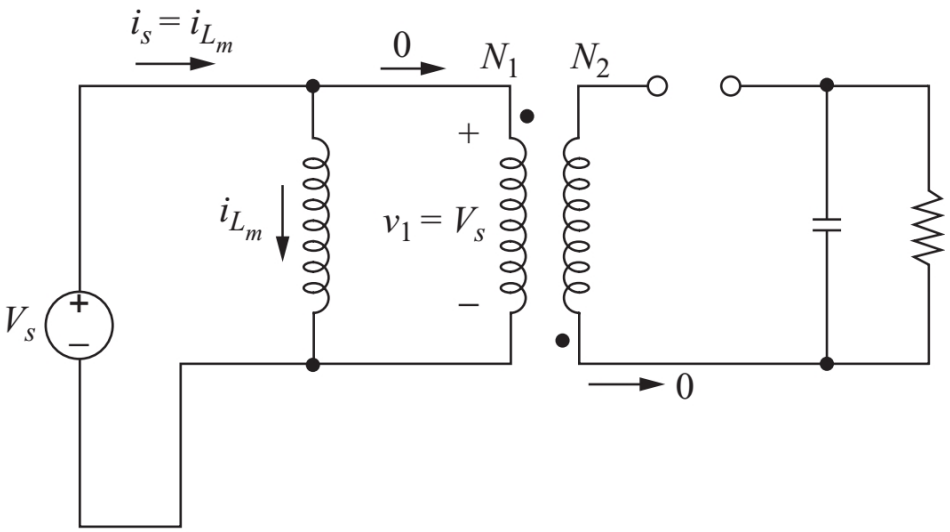

$$v_1 = V_s = L_m \frac{di_{Lm}}{dt} \quad (2)$$

$$\frac{di_{Lm}}{dt} = \frac{V_s}{Lm} = \frac{\Delta i_{Lm}}{\Delta t} = \frac{\Delta i_{Lm}}{DT} \quad (3)$$

$$(\Delta i_{Lm})_{closed} = \frac{VsDT}{L_m} \quad (4)$$

On the secondary side

$$v_2 = V_1\left(\frac{N_2}{N_1}\right) = V_s\left(\frac{N_2}{N_1}\right) \quad (5)$$

Applying KVL on secondary side.

$$v_D = -V_o - V_s\left(\frac{N_2}{N_1}\right) < 0 \quad (6)$$

Notice that the diode is reverse biased.

$$i_2 = 0 \implies i_1 = 0 \quad (7)$$

Because i_2 is zero, so i_1=0. All the current moves through L_m in an ideal transformer.

Switch off condition

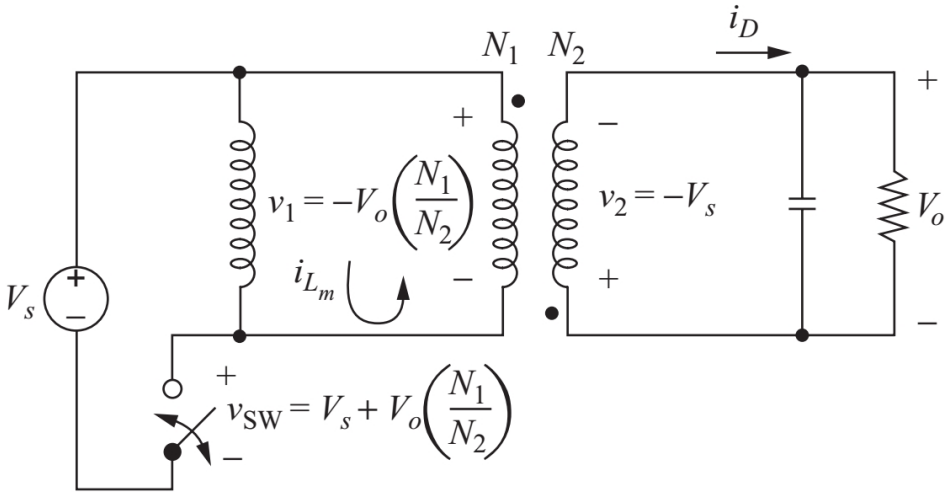

When the switch opens, the current in L_m cannot change instantaneously. So i_{Lm} enters into the undotted terminal of the primary and thus exits through undotted terminal of secondary side. The secondary voltage reflected on primary side is

$$v_1 = -V_o\left(\frac{N_1}{N_2}\right) \tag{8}$$

Voltage and currents for switch off are

$$v_2 = -V_o \tag{9}$$

$$v_1 = v_2\left(\frac{N_1}{N_2}\right) = -V_o\left(\frac{N_1}{N_2}\right) \tag{10}$$

$$L_m\frac{di_{Lm}}{dt} = v_1 = -V_o\left(\frac{N_1}{N_2}\right) \tag{11}$$

$$\frac{di_{Lm}}{dt} = \frac{\Delta i_{Lm}}{\underbrace{\Delta t}_{\text{(1-D)T}}} = \frac{-V_o}{L_m}\left(\frac{N_1}{N_2}\right) \tag{12}$$

$$(\Delta i_{Lm})_{open} = \frac{-V_o(1-D)T}{L_m}\left(\frac{N_1}{N_2}\right) \tag{13}$$

Method 1

The net change in current through an inductor in equilibrium is zero.

$$(\Delta i_{Lm})_{closed} + (\Delta i_{Lm})_{open} = 0 \tag{14}$$

$$\frac{VsDT}{L_m} - \frac{-V_o(1-D)T}{L_m}\left(\frac{N_1}{N_2}\right) = 0 \tag{15}$$

Solving for V_o

$$V_o = \underbrace{V_s\left(\frac{D}{1-D}\right)}_{\text{same as buck-boost}} \left(\frac{N_1}{N_2}\right) \tag{16}$$

The turns ratio provides extra control on the output in addition to isolation.

Method 2

For switch on condition

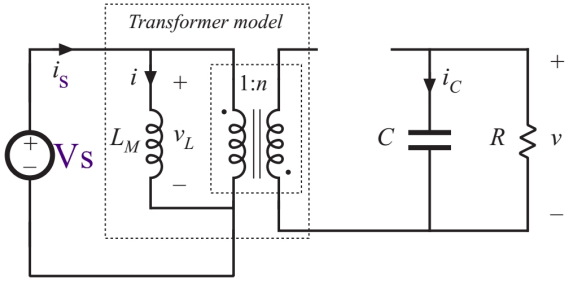

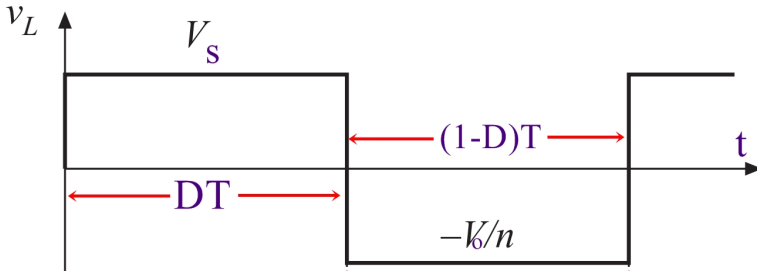

$$v_L = V_s \tag{17}$$

$$v_L = D(V_s) + (1-D)(\frac{-V_o}{n}) = 0 \tag{19}$$

For switch off condition

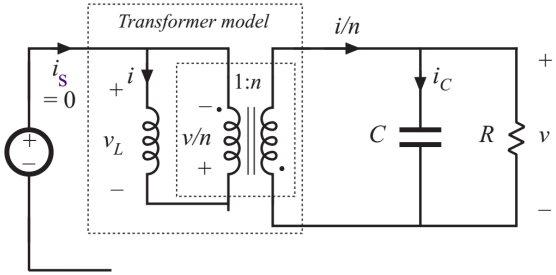

$$v_L = \frac{-V_o}{n} \tag{18}$$

Solving for transfer function

$$\frac{V_o}{V_s} = n\frac{D}{1-D} \tag{20}$$

where, $n = \frac{N_1}{N_2}$

(16) and (20) are same

Currents and voltage in flyback converter

When the switch is open, the switch blocks the voltage and diode conducts the current.

$$\begin{cases} i_D = -i_1\left(\frac{N_1}{N_2}\right) = i_{Lm}\left(\frac{N_1}{N_2}\right) \\ v_{sw} = V_s - v_1 = V_s + V_o\left(\frac{N_1}{N_2}\right) \\ i_R = \frac{V_o}{R} \\ i_C = i_D - i_R = i_{Lm}\left(\frac{N_1}{N_2}\right) - \frac{V_o}{R} \end{cases} \tag{21}$$

Notice that the switch here, has to block voltage greater than the input voltage. For a unity turn ratio, the switch has to block twice the input voltage.

Currents and voltage in flyback converter

Considering a lossless converter

$$P_s = P_o \implies V_s I_s = \frac{V_o^2}{R} \tag{22}$$

Average source current I_s is related to the average of the L_m current.

$$I_s = I_{Lm} D \tag{23}$$

Substituting, (23) in (22) and solving for I_{Lm}.

$$\begin{cases} V_s I_{Lm} D = \frac{V_o^2}{R} \\ I_{Lm} = \frac{V_o^2}{V_s D R} \end{cases} \tag{24}$$

Using (16), I_{Lm} can also be expressed as

$$I_{Lm} = \frac{V_s D}{(1-D)^2 R}\left(\frac{N_2}{N_1}\right)^2 = \frac{V_o}{(1-D)R}\left(\frac{N_2}{N_1}\right) \tag{25}$$

Currents and voltage in flyback converter

Current waveform for a flyback converter

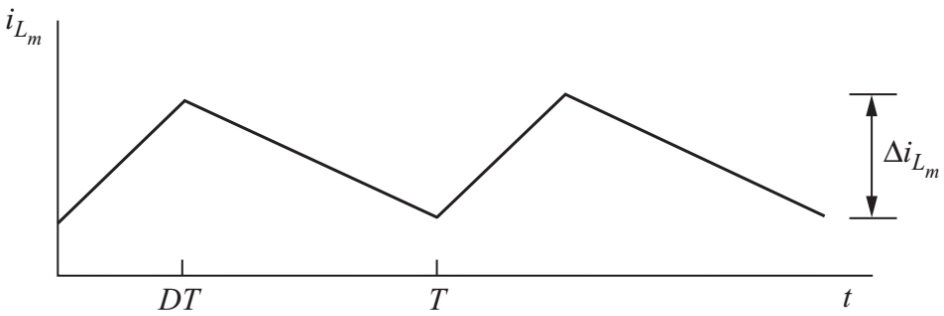

(a)

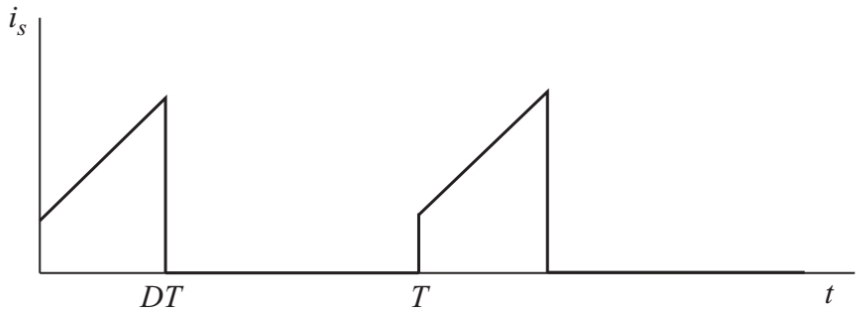

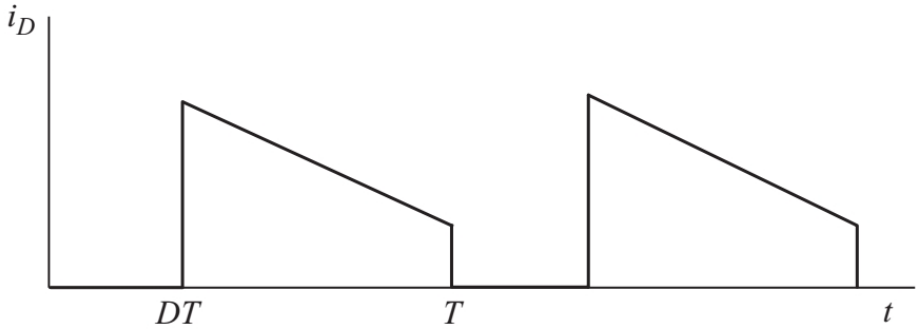

(c)

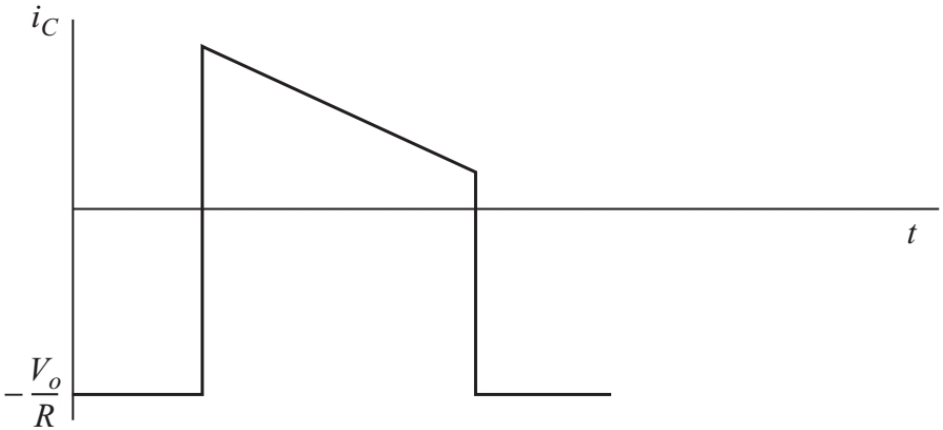

Magnetizing inductance : Method 1

The maximum and minimum values of inductor current are

$$\begin{cases} I_{Lm,max} = I_{Lm} + \frac{\Delta i_{Lm}}{2} \\ = \frac{V_s D}{(1-D)^2 R}\left(\frac{N_2}{N_2}\right)^2 + \frac{V_s D T}{2L_m} \end{cases} \tag{26}$$

$$\begin{cases} I_{Lm,min} = I_{Lm} - \frac{\Delta i_{Lm}}{2} \\ = \frac{V_s D}{(1-D)^2 R}\left(\frac{N_2}{N_2}\right)^2 - \frac{V_s D T}{2L_m} \end{cases} \tag{27}$$

For CCM $I_{Lm,min} > 0$. At BCM, $I_{Lm,min} = 0$

$$\frac{V_s D}{(1-D)^2 R}\left(\frac{N_2}{N_2}\right)^2 = \frac{V_s D T}{2L_m} = \frac{V_s D}{2L_m f} \tag{28}$$

$$(L_m)_{min} = \frac{(1-D)^2 R}{2f}\left(\frac{N_2}{N_2}\right)^2 \tag{29}$$

Magnetizing inductance : Method 2

Consider the magnetizing inductor current shown

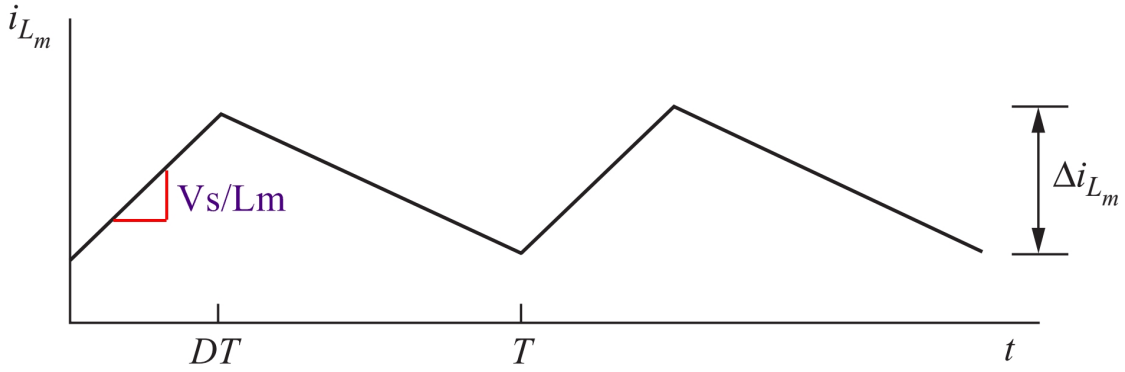

In terms of the ripple present in the magnetizing inductance current

$$(\frac{V_s}{L_m}) \times (DT) = \Delta i_{Lm} \tag{30}$$

Solving for L_m

$$L_m = \frac{V_s DT}{\Delta i_{Lm}} = \frac{V_s D}{f \Delta i_{Lm}} \tag{31}$$

Output capacitor

Output capacitor in a flyback converter follows the same process as that of a buck-boost converter.

$$\frac{\Delta V_o}{V_o} = \frac{D}{RCf} \tag{32}$$

Multiple output flyback converter

Multiple outputs are necessary when different output voltages are required e.g., in desktop computer power supply. Turn ratio define the voltage expression of each output.

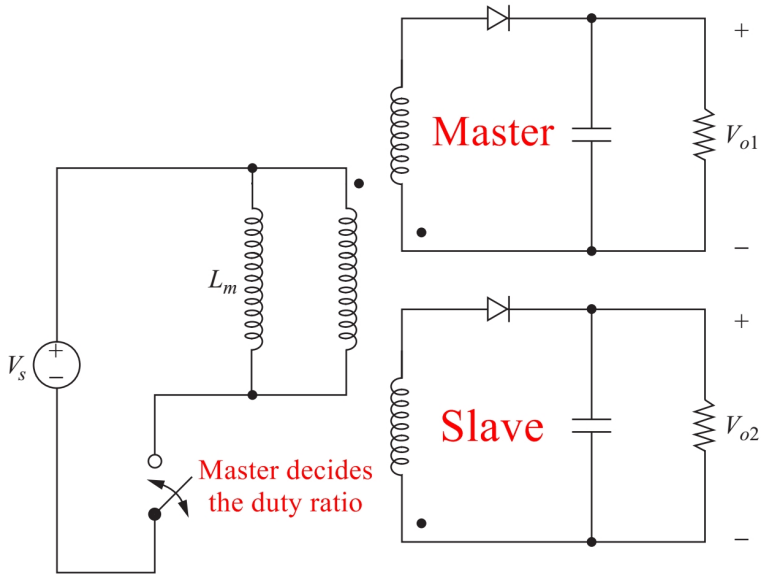

Only one winding can have a regulated voltage. That winding is called as master. All other windings are slave windings. So how to choose which output winding is master ?

Multiple output flyback converter

Usually, the winding connected to the most sensitive load is chosen as master winding.
If the power is small, then a linear regulator like LM7505, 7515 etc can be used to regulate the slave output.
Flyback converters are limited for application with 200 W or less. It is because implementation of a transformer with relatively large energy storage capability is always a challenge. Students are advised to read more on this issue from this paper.
Tamyurek, B. and Kirimer, B., 2015. An interleaved high-power flyback inverter for photovoltaic applications. IEEE transactions on Power Electronics, 30(6), pp.3228-3241.